newsspot.co.ke
Remove Watermark Now

## SECTION A

*Answer **ALL** the questions from this section.*

1. (a) Define the following terms and state their SI units:

(i) specific heat capacity;

(ii) specific latent heat of fusion;

(iii) specific latent heat of vaporization.

(6 marks)

(b) An espresso coffee machine steam at 100°C is used to heat milk. If the specific heat capacity of milk is 4.0 kJ/kg K and the latent heat of vaporization of steam is 2260 x $10^3$ J/kg, calculate the:

(i) energy required to heat 250 g of milk from a room temperature of 20°C to 80° C;

(ii) mass of condensed steam. (6 marks)

(c) A particular wave is given by the equation

$y = 8.5\text{m} \sin[(0.8\text{m}^{-1})x-(5.4 \text{ rad/s})t]$. Determine the:

(i) frequency;

(ii) period;

(iii) velocity of the wave;

(iv) displacement of the wave at $x = 5.87$ m and t = 2.59 sec. (8 marks)

pdfelement

2. (a) State the principle of conservation of linear momentum.

(1 mark)

(b) A flywheel of diameter 360 mm increases its speed uniformly from 630 rev/min to 1050 rev/min in 11 seconds. Calculate the:

$\alpha =$

(i) angular acceleration of the wheel in rad/sec²;

(ii) number of revolutions made during the speed change;

(iii) linear acceleration of a point in the rim of the wheel in m/sec².

(6 marks)

Remove Watermark Now
newsspot.co.ke

(c) A mass of 700 kg falling 0.2 m from up is used to drive a pile of mass 500 kg into the ground. The pile is driven 75 mm into the ground. If there is no rebound, find the:

(i) common velocity of the pile and the pile hammer before the impact;

(ii) loss of kinetic energy on impact;

(iii) efficiency of the pile driving operation. (13 marks)

3. (a) (i) List down any **four** safety rules to be observed in the workshop. (4 marks)

(ii) Outline the procedure of the "kiss of Life" method as a technique for an electric shock treatment.

(6 marks)

(b) With the aid of a sketch, describe the following processes:

(i) electroplating;

(ii) seam welding. (10 marks)

4. Draw an isometric projection from the views given in figure 1. (20 marks)

pdfelement

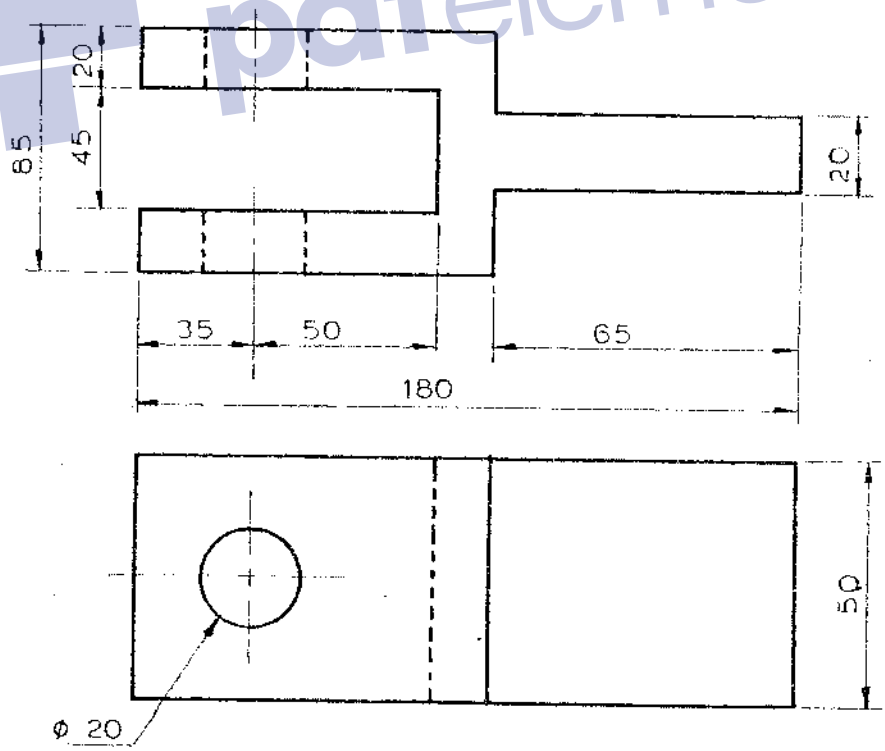


Figure 1

newsspot.co.ke

Remove Watermark Now

## SECTION B

*Attempt only ONE question from this section.*

5. (a) (i) State the assumptions made in the theory of pure torsion.

(ii) Show from first principles that when a circular shaft is subjected to pure torsion the shear stress induced is proportional to its radius. (11 marks)

(b) A hallow steel shaft has external and internal diameters of 100 mm and 62.5 mm respectively. When transmitting power it is observed to twist through an angle of 1.8° over a length of 3 m. The modulus of rigidity of the steel is 85 kN/mm². Determine the:

(i) maximum shear stress induced in the material by the torque transmitted.

(ii) power transmitted by the shaft when it is revolving at 180 rev/min. (9 marks)

6. (a) Differentiate between nuclear fission and fusion. (3 marks)

(b) Explain the term isotope and list **two** examples. (3 marks)

(c) Explain the merits and demerits of nuclear power generation over other sources of power. (6 marks)

(d) Ice at 0° C is added to 300 g of water at initial temperature of 80° C in a vacuum flask. When 120 g of ice has been added and all melted, the temperature of the flask and its content is 40° C. When a further 100 g of ice has been added, the final temperature becomes 10° C. The specific heat capacity of water is 4200 J/kg K. Calculate the specific latent heat of fusion of ice. (Neglect any heat lost to the surrounding). (8 marks)

7. (a) State any **three** factors which affect the current carrying capacity of a cable. (3 marks)

(b) Outline **four** precautions to be observed in order to avoid being struck by lightning. (4 marks)

(c) Explain the following properties of engineering materials:

(i) hardness;

(ii) resistivity;

(iii) electrical conductivity. (6 marks)

(d) With the aid of a sketch, explain the rightward welding technique and state any **two** of its advantages. (7 marks)

pdfelement

Remove Watermark Now

8. (a) An ellipse has the major axis measuring 110 mm and the minor axis measuring 70 mm. By using the rectangular method, draw the ellipse.

(10 marks)

(b) (i) Construct a triangle whose perimeter is 180 mm and the three sides are in the ratio of 3:5:7.

(ii) Inscribe a circle on the triangle drawn in 8 (b) (i)

(10 marks)

pdfelement