SCan

Name_____ Index No._____

1521/204
1601/204
MICRO-ELECTRONICS, ELECTRICAL PRINCIPLES II, ELECTRICAL MAINTENANCE AND FAULT DIAGNOSIS
Oct./Nov. 2015
Time: 3 hours

Candidate's Signature_____

Date _____

THE KENYA NATIONAL EXAMINATIONS COUNCIL

CRAFT CERTIFICATE IN ELECTRICAL AND ELECTRONIC TECHNOLOGY (POWER OPTION) MODULE II

MICRO-ELECTRONICS, ELECTRICAL PRINCIPLES II, ELECTRICAL MAINTENANCE AND FAULT DIAGNOSIS

3 hours

Kisumu Institute of Science & Technology
LIBRARIAN
04 DEC 2015
P.O. Box 414 - 40100 Kisumu

INSTRUCTIONS TO CANDIDATES

Write your name and index number in the spaces provided above.
Sign and write the date of the examination in the spaces provided above.
You should have the following for this examination:
a non-programmable electronic calculator/mathematical table;
graph paper and 8085 instruction set.
*This paper consists of **TWO** sections; **A** and **B**.*
*Answer **ALL** the questions in section **A** and any **ONE** question from section **B** in the spaces provided in this question paper.*
All questions carry equal marks and maximum marks for each part of a question are as indicated.
*Do **NOT** remove any pages from this question paper.*
Candidates should answer the questions in English.

For Examiner's Use Only

Section	Question	Maximum Score	Candidate's Score
A	1	20	
	2	20	
	3	20	
	4	20	
B		20	
		Total Score	

This paper consists of 28 printed pages.

Candidates should check the question paper to ascertain that all the pages are printed as indicated and that no questions are missing.

© 2015 The Kenya National Examinations Council

SECTION A

*Answer **ALL** the questions in this section in the spaces provided.*

1. (a) A moving coil instrument has a full scale deflection voltage of 80 mV. The instrument's resistance is 20 Ω.

   (i) Draw a circuit diagram of the arrangement;

   (ii) Determine the:

   (I) value of the shunt resistor which will enable it measure 50 A;

   (II) value of multiplier resistor which will enable it measure 100 V.

   (8 marks)

   (b) Two single phase a.c. currents flowing in a circuit are given as:

   $i_1 = 12\sin(\omega t - 0.6983)$ and $i_2 = 15\sin(\omega t + 0.873)$.

   Sketch the phasor diagram and determine the:

   (i) value of $i_2 - i_1$ in the form of $A\sin(\omega t \pm \phi)$;

   (ii) RMS value of $i_2 - i_1$. (12 marks)

2. (a) Define the following with respect to a.c. circuits:

   (i) Q-factor;

   (ii) impedance. (4 marks)

   (b) **Figure 1** shows R-L-C circuit diagram. Determine the:

   (i) branch currents I_1 and I_2;

   (ii) supply current I_s;

   (iii) circuit power factor;

   (iv) apparent power. (12 marks)

Kiambu Institute of Science & Technology
04 DEC 2015
P. O. Box 414 - 00900, Kiambu

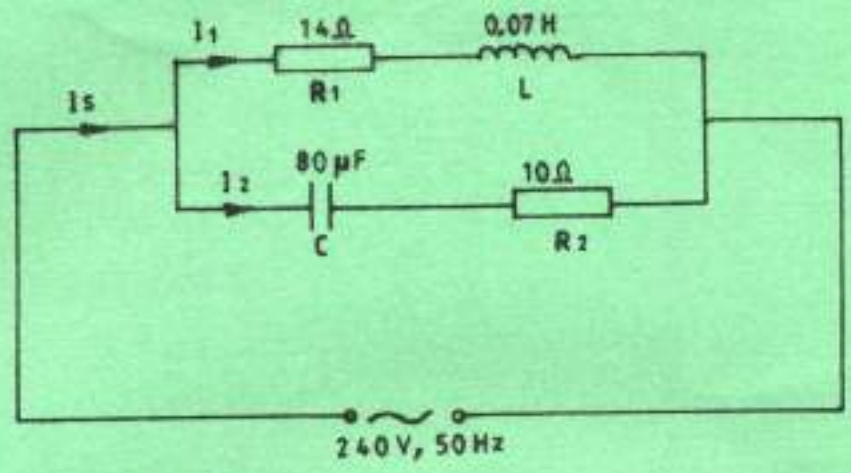

Fig. 1

(c) Sketch growth and decay curves for R-C series circuit while connected across a d.c. supply. (4 marks)

3. (a) **Figure 2** shows the pin diagram of an 8085 microprocessor.

(i) Determine the size of the:

(I) data bus;

(II) address bus.

(ii) Identify the following pins:

(I) non-maskable interrupt;

(II) maskable interrupt.

(iii) Describe the function of each of the following pins:

(I) 32;

(II) 34. (10 marks)

Kiambu Institute of Science & Technology
LIBRARIAN
04 DEC 2015
(17)
P.O. Box 474 - 00900, Kiambu

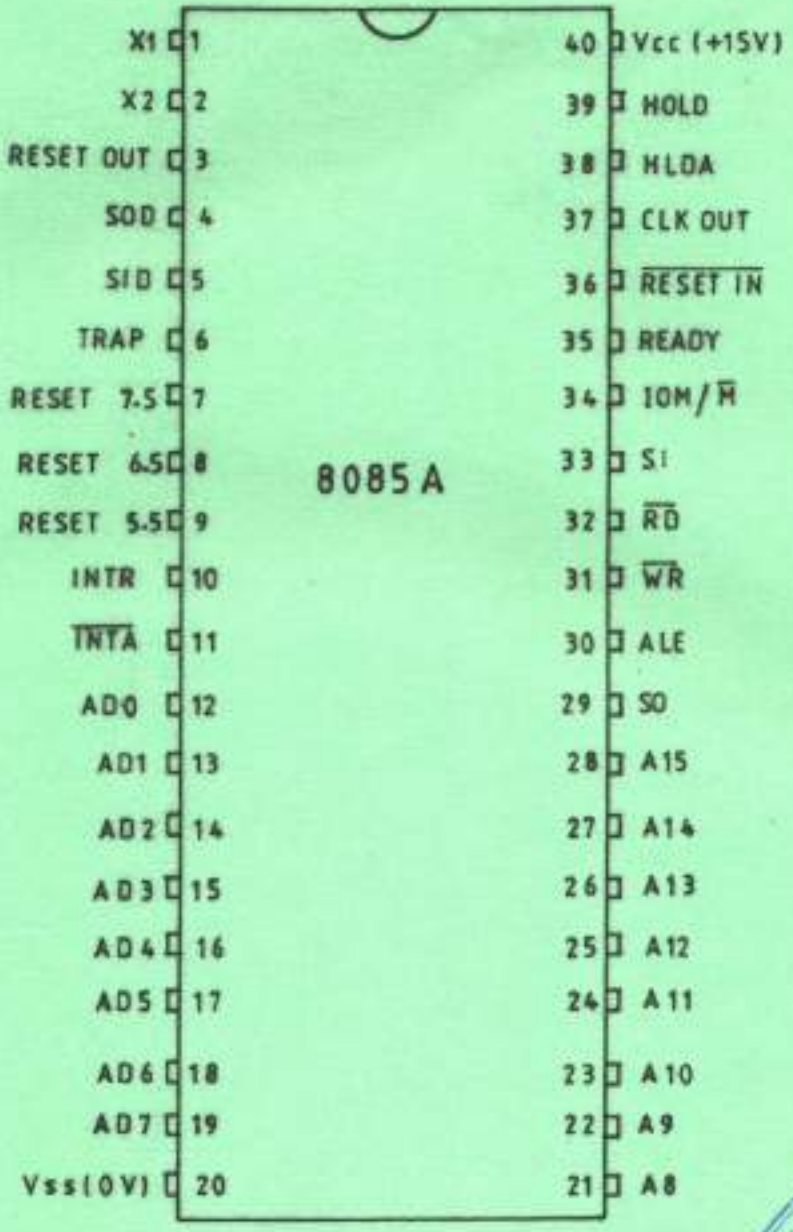

Fig. 2

Kiambu Institute of Science & Technology
LIBRARIAN
04 DEC 2015
P.O. Box 414 - 00900, Kiambu

(b) (i) State **two** merits of back up memories;

(ii) Define each of the following with respect to hard disk drives:

(I) track;

(II) cluster.

(iii) A hard disk drive has 20 heads, 800 tracks/side, 16 sectors/track and 512 bytes per sector. Determine the total capacity of the hard disk, in megabytes. (10 marks)

4. (a) Explain the following activities carried out during maintenance:

(i) overhaul;

(ii) budgeting. (6 marks)

(b) State **four** conditions to be checked when performing mechanical inspection on a motor and its control gear. (4 marks)

(c) (i) List **two** causes for each of the following symptoms in a d.c. motor:

(I) erratic starting performance with excessive current starting and running;

(II) brush chattering.

(ii) State the remedies for (c) (i). (6 marks)

(d) Draw a circuit diagram for an "open circuit test" for a single phase transformer. (4 marks)

Kiambu Institute of Science & Technology
LIBRARIAN
04 DEC 2015
(17)
P.O. Box 414 - 00900, Kiambu

SECTION B

*Answer any **ONE** question from this section in the spaces provided.*

5. (a) State **four** causes of low power factor in a.c. circuits. (4 marks)

(b) On the same axis, sketch the three phase a.c. voltage waveforms over the range $0^\circ \leq \theta \leq 360^\circ$. (5 marks)

(c) **Figure 3** shows a star load connected across 415 V, 50 Hz a.c. supply. Determine the:

(i) phase currents;

(ii) power factor;

(iii) total power. (11 marks)

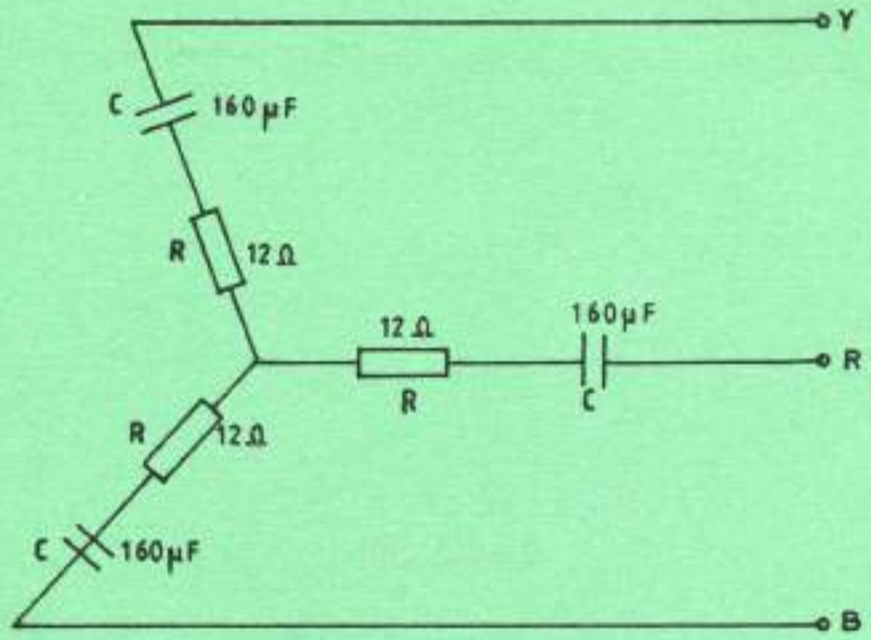

Fig. 3

Kiambu Institute of Science & Technology
LIBRARY
04 DEC 2015

6. (a) Describe the following types of maintenance programmes:

(i) breakdown;

(ii) predictive. (6 marks)

(b) State **four** merits of planned maintenance. (4 marks)

(c) Outline the procedures to test each of the following faults in an a.c. motor:

(i) motor buzzes or hums but fails to start;

(ii) fuse blows or overload trips when any attempt is made to start the motor. (6 marks)

(d) State **four** reasons why a split phase induction motor will fail to start. (4 marks)

7. (a) State **four** functions of electrical maintenance department. (4 marks)

(b) State **three** causes of each of the following faults in a fluorescent lamp fitting:

(i) lamp fails to start and there is no end glow;

(ii) lamp flashes ON and OFF;

(iii) lamp fails to start and end glows dull and reddish. (9 marks)

(c) Draw a labelled diagram of a high pressure mercury vapour lamp. (7 marks)

Kenya Institute of Science & Technology
LIBRARY
04 DEC 2015
P.O. Box 414 - 00900 Kiambu

8. (a) Define each of the following microprocessors addressing modes, illustrating each with an example:

(i) direct;

(ii) register;

(iii) immediate. (6 marks)

(b) Write assembly language program segments to perform each of the following:

(i) $\begin{array}{r} 37 \\ +69 \\ \hline \end{array}$

(ii) $(24)_{10} \times (6)_{10}$

(iii) $\begin{array}{l} (10110001)_2 \\ \underline{X-OR(01011101)_2} \\ \hline \end{array}$ (8 marks)

(c) **Table 1** shows an 8085 assembly language program. Draw a trace table showing the contents of registers A, B and C at the end of each instruction execution. (6 marks)

Table 1

MV1 A, 14 H
MV1 B, 23 H
ADD A
ADD B
MOV C, A
HLT

Kenya Institute of Science & Technology
LIBRARIAN
04 DEC 2015

Instruction set of **8080/8085**

OP CODE	MNEMONIC	OP CODE	MNEMONIC	OP CODE	MNEMONIC	OP CODE	MNEMONIC	OP CODE	MNEMONIC	OP CODE	MNEMONIC
00	NOP	28	DCX H	56	MOV D,M	81	ADD C	AC	XRA H	D7	RST 2
01	LXI B,D16	2C	INR L	57	MOV D,A	82	ADD D	AD	XRA L	D8	RC
02	STAX B	2D	DCR L	58	MOV E,B	83	ADD E	AE	XRA M	D9	–
03	INX B	2E	MVI L,D8	59	MOV E,C	84	ADD H	AF	XRA A	DA	JC Adr
04	INR B	2F	CMA	5A	MOV E,D	85	ADD L	B0	ORA B	DB	IN D8
05	DCR B	30	SIM	5B	MOV E,E	86	ADD M	B1	ORA C	DC	CC Adr
06	MVI B,D8	31	LXI SPD16	5C	MOV E,H	87	ADD A	B2	ORA D	DD	–
07	RLC	32	STA Adr	5D	MOV E,L	88	ADC B	B3	ORA E	DE	SBI D8
08	–	33	INX SP	5E	MOV E,M	89	ADC C	B4	ORA H	DF	RST 3
09	DAD B	34	INR M	5F	MOV E,A	8A	ADC D	B5	ORA L	E0	RPO
0A	LDAX B	35	DCR M	60	MOV H,B	8B	ADC E	B6	ORA M	E1	POP H
0B	DCX B	36	MVI M,D8	61	MOV H,C	8C	ADC H	B7	ORA A	E2	JPO Adr
0C	INR C	37	STC	62	MOV H,D	8D	ADC L	B8	CMP B	E3	XTHL
0D	DCR C	38	—	63	MOV H,E	8E	ADC M	B9	CMP C	E4	CPO Adr
0E	MVI C,D8	39	DAD SP	64	MOV H,H	8F	ADC A	BA	CMP D	E5	PUSH H
0F	RRC	3A	LDA Adr	65	MOV H,L	8G	SUB B	BB	CMP E	E6	ANI D8
10	—	3B	DCX SP	66	MOV H,M	91	SUB C	BC	CMP H	E7	RST 4
11	LXI D,D16	3C	INR A	67	MOV H,A	92	SUB D	BD	CMP L	E8	RPE
12	STAX D	3D	DCR A	68	MOV L,B	93	SUB E	BE	CMP M	E9	PCHL
13	INX D	3E	MVI A,D8	69	MOV L,C	94	SUB H	BF	CMP A	EA	JPE Adr
14	INR D	3F	CMC	6A	MOV L,D	95	SUB L	C0	RNZ	EB	XCHG
15	DCR D	40	MOV B,B	6B	MOV L,E	96	SUB M	C1	POP B	EC	CPE Adr
16	MVI D,D8	41	MOV B,C	6C	MOV L,H	97	SUB A	C2	JNZ Adr	ED	—
17	RAL	42	MOV B,D	6D	MOV L,L	98	SBB B	C3	JMP Adr	EE	ERI D8
18	—	43	MOV B,E	6E	MOV L,M	99	SBB C	C4	CNZ Adr	EF	RST 5
19	DAD D	44	MOV B,H	6F	MOV L,A	9A	SBB D	C5	PUSH B	F0	RP
1A	LDAX D	45	MOV B,L	70	MOV M,B	9B	SBB E	C6	ADI D8	F1	POP PSW
1B	DCX D	46	MOV B,M	71	MOV M,C	9C	SBB H	C7	RST 0	F2	JP Adr
1C	INR E	47	MOV B,A	72	MOV M,D	9D	SBB L	C8	RZ	F3	DI
1D	DRC E	48	MOV C,B	73	MOV M,E	9E	SBB M	C9	RET Adr	F4	CP Adr
1E	MVI E,D8	49	MOV C,C	74	MOV M,H	9F	SBB A	CA	JZ	F5	PUSH PSW
1F	RAR	4A	MOV C,D	75	MOV M,L	A0	ANA B	CB	—	F6	ORI D8
20	RIM	4B	MOV C,E	76	HLT	A1	ANA C	CC	CZ Adr	F7	RST 6
21	LXI H,D16	4C	MOV C,H	77	MOV M,A	A2	ANA D	CD	CALL Adr	FB	RM
22	SHLD Adr	4D	MOV C,L	78	MOV A,B	A3	ANA E	CE	ACI D8	F9	SPHL
23	INX H	4E	MOV C,M	79	MOV A,C	A4	ANA H	CF	RST 1	FA	JM Adr
24	INR H	4F	MOV C,A	7A	MOV A,D	A5	ANA L	D0	RNC	FB	EI
25	DCR H	50	MOV D,B	7B	MOV A,E	A6	ANA M	D1	POP D	FC	CM Adr
26	MVI H,D8	51	MOV D,C	7C	MOV A,H	A7	ANA A	D2	JNC Adr	FD	—
27	DAA	52	MOV D,D	7D	MOV A,L	A8	XRA B	D3	OUT D8	FE	CPI D8
28	—	53	MOV D,E	7E	MOV A,M	A9	XRA C	D4	CNC Adr	FF	RST 7
29	DAD H	54	MOV D,H	7F	MOV A,A	AA	XRA D	D5	PUSH D		
2A	LHLD Adr	55	MOV D,L	80	ADD B	AB	XRA E	D6	SUI D8		

D8 = constant, or logical/arithmetic expression that evaluates to an 8-bit data quantity. D16 = constant, or logical/arithmetic expression that evaluates to a 16-bit data quantity. Adr = 16-bit address.

Kiambu Institute of Science & Technology
LIBRARIAN
04 DEC 2015
P.O. Box 474 - 00900, Kiambu

THIS IS THE LAST PRINTED PAGE

1521/204
1601/204
Oct./Nov. 2015